SERVOMEX
COMBUSTION ANALYSERS

INTRODUCING FLOWCUBE
SENSOR TECHNOLOGY
RELIABILITY, SAFETY, CONFIDENCE

SERVOTOUGH
Fluegas Exact (2700)

For maximum efficiency and fuel cost savings, the SERVOTOUGH Fluegas Exact (2700) is a high performance, combustion gas analyser ideal for monitoring the oxygen and combustibles in a wide variety of combustion processes. The Fluegas Exact is designed to meet the needs of power generation, process heaters, thermal crackers and incinerators, where it is your perfect partner for harsh environments, high temperatures and dusty conditions.

FEATURES

- **Flowcube technology -** integrated, in-line, solid state flow sensor - ground breaking technology now allows a continuous monitoring of flow through the analyser; enhancing diagnostics and measurement certainty. A must where operational safety is vital
- **Close coupled, low flow extracted volume design** - compared to in-situ analysers, the Fluegas Exact is not subject to the harsh process conditions, ensuring a lower cost of ownership while simultaneously delivering fast, stable and highly reliable O_2 and COe measurements
- **Servomex zirconium oxide cell -** an accurate, long life, low drift, and highly robust O_2 measurement, able to withstand reducing process conditions
- **Thick film catalytic sensors** - a sensitive, fast response, and reliable COe measurement that responds to COe even in low process O_2 conditions
- **Safety first -** protective, tested flametraps as standard prevent possible ignition of flue gases in fuel rich conditions

APPLICATIONS

- Process heaters
- Thermal crackers
- Incinerators
- Power generation boilers
- High temperatures
- High dust loadings

SERVOMEX

SERVOTOUGH
Fluegas Exact (2700)

KEY FEATURES

Servomex Flowcube Technology
Servomex's determination to deliver users the most safe, accurate and reliable levels of measurement remains at the forefront of our design philosophy – therefore our unique flow sensor technology has been placed before the measurement transducers, enabling positive flow conditions to be validated.

Close Coupled, Low Flow Extractive Design
The close coupled and low flow extractive design of the Fluegas Exact delivers market leading sensor life, reliability and stability. By extracting the sample at low flow rates, as opposed to measuring the sample in the process stream, the Fluegas Exact is not vulnerable to the effects of the harsh process environment. In addition, the unique low flow rate design ensures the probe and filters are not compromised by dust and particulates that regularly affect high flow rate extractive analysers. All these benefits are achieved without compromising the response time of the measurement.

Servomex Zirconium Oxide Cell
Our Zirconium Oxide cell, designed specifically for the combustion analysis market, is highly robust with excellent resistance to thermal and mechanical shock, and unlike many others available, it is resistant even in reducing process conditions, offering instant recovery and operation when process conditions return to normal. Acknowledged as the most reliable on the market, it offers world class accuracy and stability together with extended calibration intervals.

Thick Film Catalytic Sensors
Combined with the measurement of O_2, the measurement of COe is a major advantage in improving combustion efficiency and safety. Our Thick Film Catalytic Sensors offer fast response and high sensitivity to combustible gas breakthrough, the first sign of incomplete combustion. By reducing O_2 levels close to those of incomplete combustion, significant fuel savings and a reduction in NOx emmisions can be readily achieved. For added piece of mind and continuous operational performance, all our catalytic sensors are supplied with excess auxiliary air. Unlike traditional pellistor type measurements, this allows COe measurements even if the flue gas O_2 levels drop significantly below that required for complete combustion.
Two sensor versions are available depending on application usage; a high sensitivity version for natural and clean gas applications, and a sulphur resistant version for sour gas and sulphur resistant fuels.

Safety First
During process upset, start up and shut down conditions, there is always a chance that a flue rich mixture is temporarily in the process. To help protect against the Fluegas Exact being a source of ignition to these flue rich gases, the Fluegas Exact has in-built flame traps that prevent gas ignition within the hot Zirconium Oxide cell passing back to the process flue.

HAZARDOUS AREA APPROVALS

Control Unit:
- Ex ic nA nC IIC T5 Gc (Ta = -10˚C to +55˚C)
- Ex tc IIIC T75˚C Dc (Ta = -10˚C to +55˚C)
- ATEX Group II, Category 3, Gas and Dust hazardous atmospheres
- Intertek Certification No. ITS10ATEX47005X

Factory Mutual - FMRC approved as non-incendive for:
- Class I, Div. 2, Groups A, B, C & D
- Class II, Div. 2, Groups F & G
- Class III, Div. 1 & 2
- Enclosure Type 4X
- T5. Ambient Temperature 55°C max.

Canadian Standards Association - CSA suitable for use in:
- Class I, Div. 2, Groups A, B, C & D
- Class II, Div. 1, Groups E, F & G
- Class III, Div. 1
- T5. Ambient Temperature 55°C max. Enclosure Type 4X

Sensor Head:
- Use purge for installation in hazardous locations
- EUROPE - ATEX Group II, Category 3 Gases (Zone 2) when fitted with a suitable purge*
- USA - Class I and II, Div. 2 and Class III, Div. 1 and 2 when fitted with a suitable purge*

* For certified sensor heads which include the flow sensor option, please contact Servomex for the latest certification status.

SERVOTOUGH
Fluegas Exact (2700)

EC DIRECTIVE COMPLIANCE

The SERVOTOUGH Fluegas Exact is in compliance with:

Low Voltage Directive

EMC Directive

And all other applicable Directives

REGIONAL APPROVALS

China Pattern Approval
TÜV tested and notification by BMU to the requirements of BImSchV
13 (large combustion plants)
and 17 (waste incineration and similar processes)
GOST Pattern Approval for Russia
UK MCERTS Approval

ELECTRICAL SAFETY

Electrical safety to IEC 61010-1, ANSI/ISA 61010-1, CAN/CSA 61010-1

The product is rated for “Overvoltage Category II”

The product is rated for “Pollution Degree 2”

SERVOTOUGH
Fluegas Exact (2700)

SPECIFICATIONS

Gas measured:	Oxygen (O_2)	Combustibles (COe-Carbon Monoxide Equivalent)	
TECHNOLOGY	Zirconium oxide (zirconia)	Patented thick film catalytic sensor	
		High Sensitivity	**Sulphur Resistant**
Typical applications:	All combustion	Natural Gas, Light Oil[1]	Sour Gas, Heavy Oils, Coal Incinerators[2]
PERFORMANCE			
Intrinsic error (accuracy):	±1% of reading or ±0.1% O_2*	±25ppm or ±5% of reading *	±75ppm or ±5% of reading *
Resolution options:	0.01% O_2	1ppm recommended	10ppm recommended
Drift (zero):	Per 3 months; <0.5% of range or 0.05% O_2*	<25ppm/week	<35ppm/week
Display range:	0.01% to 25%	0ppm to 10,000ppm	
Min. recommended range:	0-1% O_2◆	0-500ppm	
Max. COe in stream:	Not applicable	6000ppm	
Linearity:	<0.1% O_2	<3% FSR	
Repeatability:	<0.1% O_2	<1% FSR	
Recommended Calibration frequency:	12 months	1 month	
Cross sensitivity: (under normal plant operating conditions)	No significant effect	Effect of common combustible flue gases per 1000 ppm	
		SO_2 <30ppm	<100ppm
		CH_4 <10ppm	<50ppm
		H_2 <2500ppm	<2500ppm

FLOWCUBE,FLOW SENSOR	
Repeatability:	± 20ml/min at 200ml/min (nominal flow)
Response Time (T_{90}):	<20 seconds
Alarms & relays:	Two SPCO relays (250V ac/3A or 28V dc/1A max), Flow Status Alarm, and Flow Alarm Faults
Analogue output:	One configurable isolated 0/4-20mA per measurement (recommended impedance 600Ω or less, 1kΩ max) O_2 output configurable from 0-1% min. to 0-25% max. O_2 in 1% steps COe output configurable from 0-500ppm to 0-15,000ppm (measurement range remains as above)
Alarms & relays:	Four SPCO relays (250V ac/3A or 28V dc/1A max), configurable for Concentration Alarms, Faults, In Calibration, In Blowback, and solenoid valves for blowback and autocalibration
Digital inputs:	Two non-isolated digital inputs provided to remotely initiate autocalibration and perform blowback

[1] Fuels with sulphur contents <1%
[2] Fuels with sulphur contents >1% (consult Servomex for fuels with sulphur content >2.5%)
◆ below 1% display shows low oxygen level warning
* whichever is greater

The performance specification has been written, and verified, in accordance with the international standard IEC 1207-1:1994 "Expression of performance of gas analysers".

SERVOTOUGH
Fluegas Exact (2700)

SPECIFICATIONS

PHYSICAL	
Ingress protection:	IP66 / NEMA 4X
Weight:	Control unit: <11kg (<24.3lbs) Sensor head: <17kg (<37.5lbs) Flow Alarm: <2.5kg (<5.5lbs)
Dimensions, WxDxH:	Control unit: 391 x 167 x 260mm (15.4" x 6.6" x 10.3")
	Sensor head: 301 x 330 x 256mm (11.9" x 13.0" x 10.1")
	Flow Alarm: 120 x 120 x 80mm (4.7" x 4.7" x 3.1")
Mounting:	Control unit: Wall, 19" rack and panel mounting
	Sensor head: Choice of mounting flanges and adaptors
	Flow Alarm: Wall
Max altitude:	2000m (6500 feet)

Ambient temperature:	Operation	Storage
Control unit:	-10°C to +55°C (+14°F to +131°F)	-20°C to +55°C (-4°F to +131°F)
Sensor head:	-20°C to +70°C (-4°F to +158°F)	-30°C to +80°C (-22°F to +176°F)

INTERCONNECTING CABLE REQUIREMENTS

	Cross Section	Max.
Oxygen only		
3 twisted pairs with overall screen*	1.0mm²	100m
	1.5mm²	150m
	2.5mm²	300m
Combustibles only		
6 twisted pairs with individual and overall screens*		100m
Oxygen and Combustibles		
9 twisted pairs with individual and overall screens*		100m

*Maximum loop resistance of 4Ω is required for the heater connections and use cables with a minimum of 0.5mm² cross section

Note: Add 1 extra twisted pair if the optional sensor head temperature readout is required to be displayed by the Control Unit.

Part numbers for supplier Alpha Wire Company (www.alphawire.com):

Oxygen only	M9700040
Combustibles only	M9740080
Oxygen and combustibles	M9740120

Flow Sensor		
3 cores with overall screen	1.0mm²	100m

POWER REQUIREMENTS

Voltage:	100-120V ac, 50/60 Hz or 220-240V ac, 50/60 Hz
Rated Power:	Control Unit 250VA, Sensor Head 600VA

Note: Control Unit and Sensor Head are powered separately. Control Unit power supply is fixed at time of order, but is field configurable. Sensor Head supply voltage is factory set.

SENSOR HEAD COMPRESSED AIR REQUIREMENTS

Aspirator Air:

Pressure:	3.5psig typical (3 to 5psig - 0.2 to 0.3barg)
Flow:	<1.5 litres/min typical

SERVOTOUGH
Fluegas Exact (2700)

DESCRIPTION

Analyser controller	The analyser consists of a sensor head and a control unit which includes a backlit liquid crystal display (2 line x 16 characters) and an eight button keypad. The sensor head is suitable for installation in non-hazardous areas, (hazardous area available when used with suitable purge). There are four versions of the control unit available: GEN for installation in non-hazardous areas. EU2 for installation in European Zone 2 hazardous areas. FM2 for installation in US Class I & II, Division 2 and Class III, Division 1 & 2 hazardous areas. CSA for installation in Canadian Class I & II, Division 2 and Class III, Division 1 & 2 hazardous areas.
Measurement and supply voltage:	The unit can be supplied as an oxygen only measurement, combustibles (COe) only measurement, or an oxygen and combustibles measurement analyser.The analyser can also be supplied with specially coated pcbs for use in very humid environments. 110 and 220V ac available.
Combustible sensors	For natural gas and light oil applications with fuels with sulphur contents <1% our high sensitivity combustibles sensor is recommended. For sour gas, heavy oils, coal and incinerators with fuels with sulphur content >1% our sulphur resistant combustible sensor is recommended. For applications with fuels >2.5% sulphur refer to Servomex.
Flowcube internal flow sensor:	Our Flowcube technology offers an internal solid state flow sensor fitted directly to the inlet of the measurement transducers, ensuring that the measurement gas is flowing through the transducer at all times for maximum reliability and safety. The remote relay box offers one flow status relay contact and one flow sensor system fault relay contact, for maximum diagnostic coverage.
Sample probes:	A range of sample probes are available for use in different sampling environments. For samples with a relatively low dust loading (<0.2 g/m^3) open ended probes are available in stainless steel, high temperature alloy, and ceramic materials suitable for a range of temperatures up to 1750°C. Filtered probes are also available for samples with higher dust loading (up to 20 g/m^3) and temperatures below 1500°C. The stainless steel filtered probe can also be supplied with additional mechanical support and shroud. (Note: for higher dust loadings and temperatures refer to Servomex).
Internal filter:	The analyser is supplied fitted with flame arrestors and an internal filter as standard.
Electrical threaded entries:	Choose from ¾" NPT, M20, M25, PG13.5 or PG21 entries. Select entry size to suit cables and glands used.
Sensor head enclosure:	The analyser sensor head is fitted as standard with a breather port to prevent pressurisation of the enclosure. These can be replaced with fittings for the addition of a corrosive or PZ purge for the sensor head and terminal box, if required. The oxygen only analyser can also be supplied equipped to use nitrogen instead of compressed air to power the internal aspirator.
Sensor head mounting option:	There are six sensor head mounting options: A standard mounting option, a probe retention option which allows the sensor head to be removed whilst the sample probe is retained within the flue, a thermal spacer which separates the sensor head from the flue wall with a high surface temperature (350°C to 500°C), a stand off flange which increases the separation between the sensor head and the heat radiation from the flue wall (350°C to 500°C), a combined thermal spacer and probe retention and a combined probe retention and stand-off flange.
Adaptor flange option:	The sensor head is supplied with an equivalent PCD 4" ANSI 150lbs flange as standard. Adaptors are available to suit other flange sizes. The analyser is not designed to withstand 150lbs pressure. The flue pressure should be a maximum of 5psig.
Control unit monitoring:	The control unit is available for either wall or rack/panel mounting. The rack/panel mounting controller is supplied with an additional panel.
Control unit enclosure option:	The analyser can be fitted with blanking plugs, a breather port or fittings to allow the use of a corrosive or PZ type purge system.
Utilities:	A utilities unit can be configured with one or more of the following:- Aspirator air set - provides filtration and pressure regulation of the compressed air for the aspirator in the analyser. Autocalibration - provides the necessary components to allow automatic calibration of the analyser with calibration gases (not supplied) Manual calibration - provides the necessary components to allow manual calibration of the analyser with calibration gases (not supplied) Blowback - provides the necessary components to allow the blowback of the sample probe and internal filter When nitrogen aspiration is used the calibration versions of the utilities units cannot be used.

SERVOTOUGH
Fluegas Exact (2700)

DESCRIPTION

Analyser controller:	Safe Area	❑
	Hazardous Area European Cat 3, Zone 2	❑
	Hazardous Area FM Div. 2	❑
	Hazardous Area CSA Div. 2	❑
UK MCERTS:	Approval required	❑
	Not required	❑

Measurement and supply voltage:	Uncoated pcbs ❑110-120V ❑220-240V	Coated pcbs ❑110-120V ❑220-240V
O_2	❑	
Combustibles only	❑	
Oxygen & combustibles	❑	

Combustible sensors:	High sensitivity	❑	Sulphur resistant	❑
Flow sensor:	Safe area	❑		
Aspirator supply:	Air	❑	Nitrogen	❑

Standard sample probes:

None ❑

	Length (m) 0.5	1.0	1.5	2.0	2.5	3.0
SS sample probe, unsupported, open ended <700°C/1292°F	✓	✓	✓	*		
SS sample probe, unsupported, filtered <700°C/1292°F	✓	✓	✓	*		
SS sample probe, supported, filtered with shroud <700°C/1292°F	✓	✓	✓	✓	✓	✓
SS sample probe, supported, dual filtered, with shroud <700°C/1292°F	✓	✓	✓	✓	✓	✓
High temperature alloy, unsupported, open ended, <1000°C/1832°F	✓	✓	*	*		
High temperature alloy, unsupported, filtered, <1000°C/1832°F	✓	✓	*	*		
Ceramic, sample probe, open ended, <1750°C/3182°F	✓	✓	✓			
Ceramic, sample probe, unsupported, filtered, <1500°C/2732°F	✓	✓				
Hastelloy, sample probe, unsupported, open <500°C/932°F	✓	✓	✓			

Non standard probes * ❑

* For lengths, materials (including Hexoloy), and temperatures consult Servomex

Internal filter:	Internal flame arrestors and internal sample filter	☑
Electrical threaded entries:	¾" NPT (O_2 and COe)	❑
	M20 (O_2 or COe)	❑
	M25 (O_2 and COe)	❑
	PG 13.5 (O_2 or COe)	❑
	PG21 (O_2 and COe)	❑
Sensor head enclosure:	Breather port	❑
	Purge fittings	❑
Sensor head mounting option:	Standard (4" ANSI 150lbs)	❑
	Probe retention (excluding supported probes)	❑
	Thermal spacer (excluding supported probes)	❑
	Probe retention & thermal spacer (excluding supported probes)	❑
	High temperature stand off (excluding supported probes)	❑
	High temperature stand off & probe retention (excluding supported probes)	❑
Adaptor flange option:	None (4" ANSI 150lbs)	❑
	3" ANSI 150lbs equivalent	❑
	DIN 65 equivalent	❑
	DIN 80 equivalent	❑
	JIS 65 equivalent	❑
	JIS 80 equivalent	❑
	Weld-on flange complete with studs (4" ANSI 150lbs equivalent)	❑
	Model 700B/N to 2700 adaptor flange (excluding high temperature stand off)	❑
	Thermox to 2700 adaptor flange (excluding supported probes)	❑
Control unit monitoring:	Wall mounted	❑
	Rack or panel mounted	❑
Control unit enclosure option:	Blanking plugs only	❑
	Breather port	❑
	Purge fittings	❑

SERVOTOUGH
Fluegas Exact (2700)

DESCRIPTION

Utilities:	None		❑		
	Air set, single/dual		❑		
	Autocal air set	single	❑	dual	❑
	Autocal and blowback	single	❑	dual	❑
	Manual cal, single/dual		❑		

Quickstart & Installation manual:

The Fluegas Exact Analyser is supplied with a Quickstart™ and installation manual.

English ❑
French ❑
German ❑

Service manual:

A service manual containing technical descriptions, fault diagnosis information, parts removal, refitting and test instructions, tool and test equipment lists, and electrical drawings is available. It is intended for use by Servomex trained service personnel.

None ❑
English ❑

Default software interface language:

The analyser is supplied with English, French and German software installed. The active language is user selectable. The default software interface language will be active when the analyser is shipped.

English ❑
French ❑
German ❑

CALIBRATION GAS REQUIREMENTS

Calibration gas requirements:
Pressure: 1barg (15psig) Flow: 600ml/min typical

Calibration gas composition	Oxygen sensor (Zr)	Combustibles sensor (Tfx)
Air (20.95% O_2 in nitrogen) Air must be free from combustible gases (eg CO, H_2, hydrocarbons, etc)	Span (high)	Zero
0.3% O_2 in nitrogen (recommended) Gas composition can be between 0.25% and 2.5% O_2 in Nitrogen	Zero (low)	N/A
1000ppm carbon monoxide in air (recommended) Gas composition can be between 500ppm and 2500ppm in air	N/A	Span

SAMPLE WETTED MATERIALS

Item	Materials
Sensor head	Stainless steel (303 and 316), gasket sealing material (Klinger grade SLS 150)
Oxygen sensor	Stainless steel (310 and 316), zirconia, platinum, alumina, Ni/Fe/Cr alloy, high temperature sealing glasses
Combustibles sensor	Stainless steel (316), platinum, platinum/iridium, zirconia, alumina, corrosion resistant glass
Flow Cube	Stainless steel (316), Zirconia, platinum/iridium, corrosion resistant glass

Item	Materials
Unfiltered sample probe (<700°C)	Stainless steel (316)
Filtered sample probe (<700°C)	Stainless steel (316), stainless steel (310), silicon carbide
Unfiltered sample probe (700°C-1000°C)	Haynes alloy 556, stainless steel (316)
Filtered sample probe (700°C-1000°C)	Stainless steel (310), Haynes alloy 556, Stainless steel (316), silicon carbide
High temperature sample probe (<1750°C)	High temperature ceramic, stainless steel (316)

SERVOTOUGH
Fluegas Exact (2700)

SYSTEM RESPONSE TIMES T_{90} (typical)

Measurement	O_2 only	Combustibles COe only
<700°C, 1m long, stainless steel sample probe with sample filter:	<17s	<27s
<1000°C, 1m long, H556 alloy sample probe with sample filter:	<17s	<27s
<1750°C, 1m long, ceramic sample probe with sample filter:	<20s	<30s

SERVICE & SUPPORT

For new installations and replacement of older Servomex and competitor products, we will work with you to develop a bespoke service and support package, ensuring full measurement availability and plant operation within your timescales and budget.

SERVOSPARES
To ensure the integrity and optimum performance of your Servomex product, we recommend fitting only factory authorised spare parts. This is particularly important for all hazardous area certified products.

SERVOSURE
Ensure your Servomex analyser is properly commissioned and delivers optimum performance with a maintenance contract, service programme and extended warranty.

SERVOTECH
Make the most of your Servomex gas analyser by attending a training course at one of our training centres in Europe, USA or Asia or on your own site.

SERVOHELP
Whether you have a simple question or complex process challenge, our local offices and global support network are here to help you.

SERVOTOUGH
Fluegas Exact (2700)

ACCESSORIES AND STANDARD PROBE OPTIONS

Utilities unit specification

Temperature

Operating: -10°C to +50°C (+14°F to +122°F)
Storage: -20°C to +55°C (-4°F to +131°F)

Compressed air & blowback air requirements

Pressure: 1 to 5barg (15 to 72.5psig)
Flow: 4.5 to 10 litres/min
Instrument grade compressed air*, free of oil, water & dirt

Utilities units

02730701 Aspirator air set, single or dual sensor
W 93mm x D 99mm x H 165mm
(W 3.7" x D 3.9" x H 6.5"), <400gms (<1.0lbs)

02730731 Aspirator air set and manual calibration, single or dual sensors
W 390mm x D 174mm x H 265mm
(W 15.5" x D 6.8" x H 10.4"), <4.5Kgs (<10lbs)

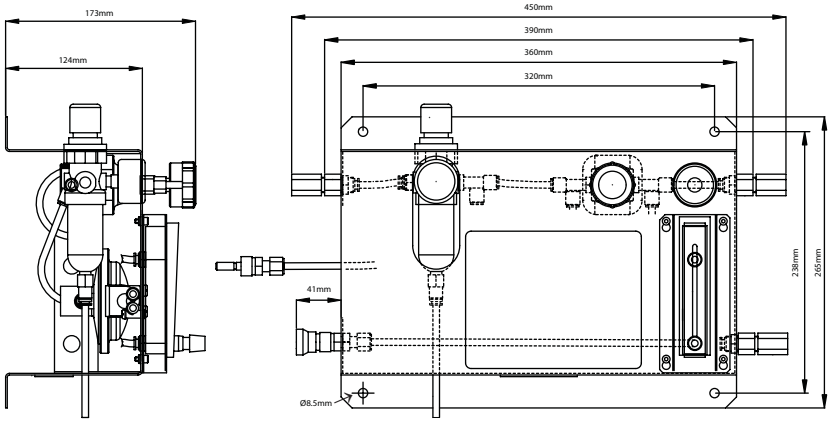

Aspirator air set and automatic calibration units **

02730711 (single sensor), 02730721 (single sensor, with blowback), 02730713C (dual sensor), 02730723C (dual sensor, with blowback)
W 400mm x D 220mm x H 500mm
(W 16" x D 9" x H 20"), <16Kgs (<35lbs)

Ingress protection: IP65/NEMA 12 (Auto cal. units only)

Power supply: 100V ac, 50/60Hz <20VA; 110-120V ac, 50/60Hz <20VA or 220-240V ac, 50/60Hz <20VA (field configurable)

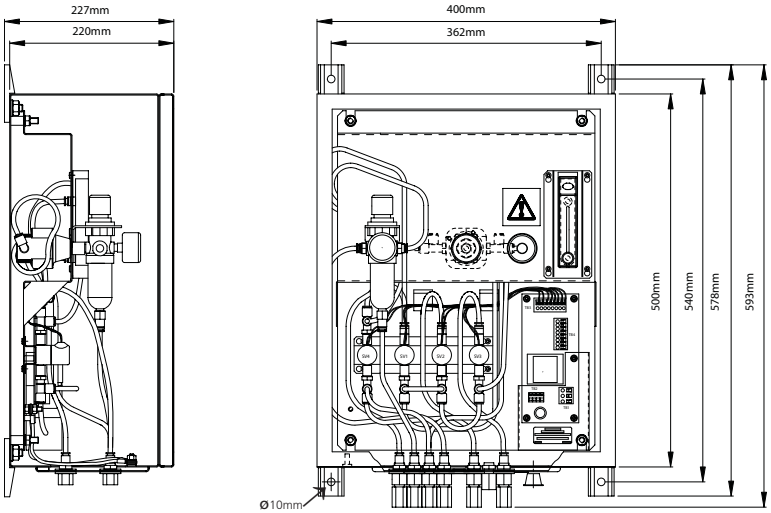

The Nickel plated brass bulkhead connections are suitable for ¼" NPT and BSP male fittings & tubing. Internal components are brass, plastic fittings and tubing.

* Or nitrogen, if analyser equipped for nitrogen aspiration (single measurement oxygen units only)

** The autocalibration versions of the utility units comply with the "CE Marking Directive" 93/68/EEC

SERVOTOUGH
Fluegas Exact (2700)

DIMENSIONS

TYPICAL ANALYSER MOUNTING ORIENTATION WITH 4" ANSI FLANGE. OTHER FLANGES ARE AVAILABLE

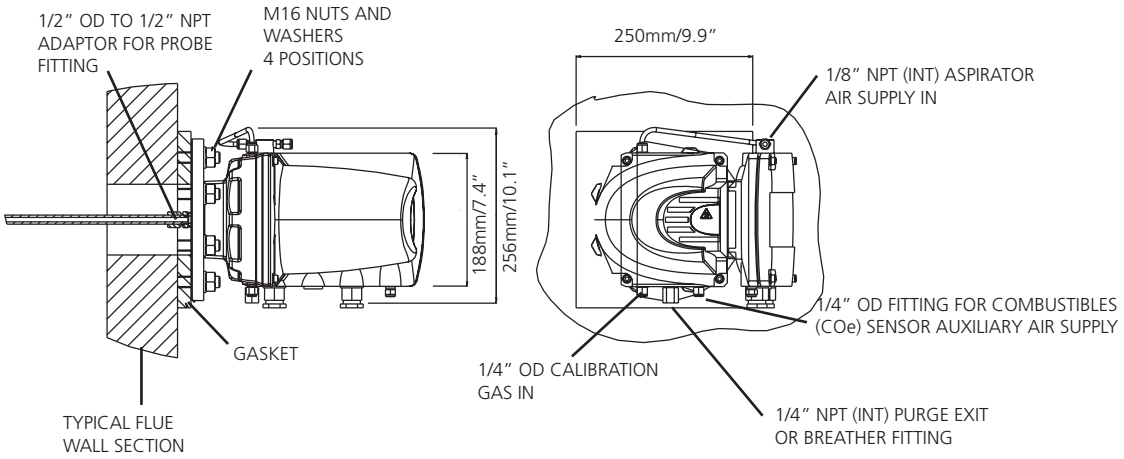

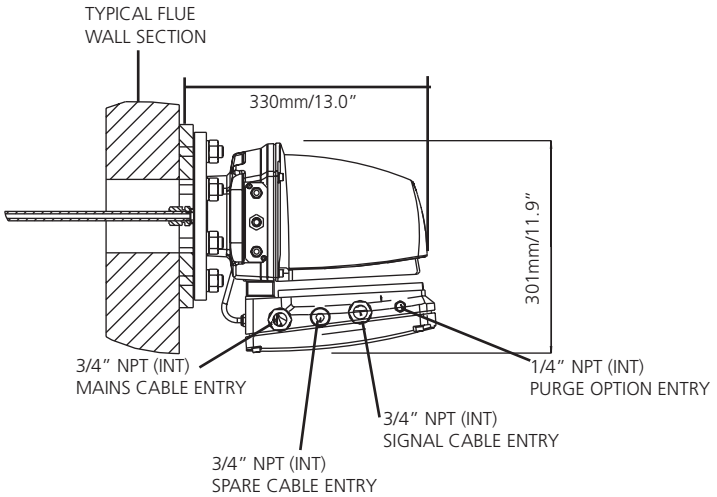

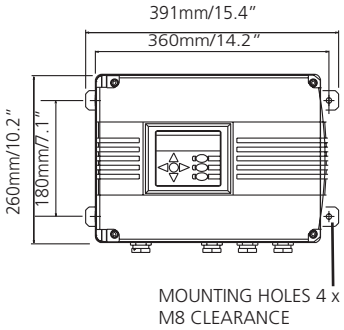

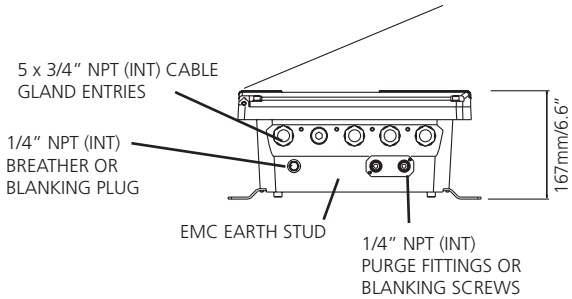

Dimensions shown in millimetres

SERVICE ACCESS REQUIRED FOR DOOR TO BE OPENED:
365mm/14.4" IN FRONT
250mm/9.9" TO LEFT HAND SIDE

SERVOTOUGH
Fluegas Exact (2700)

Servomex range of products for the Hydrocarbon Processing Industry

	SERVOMEX EMISSIONS ANALYSERS	SERVOMEX COMBUSTION ANALYSERS	SERVOMEX PROCESS ANALYSERS
SERVOTOUGH (Hazardous Area)	SERVOTOUGH 2500 - SERVOTOUGH SpectraExact 2900 - SERVOTOUGH Laser	SERVOTOUGH 2700 - SERVOTOUGH Fluegas Exact 2900 - SERVOTOUGH Laser	SERVOTOUGH 1900 Digital - SERVOTOUGH Oxy 1900 IR - SERVOTOUGH Spectra 2200 - SERVOTOUGH OxyExact 2500 - SERVOTOUGH SpectraExact 2900 - SERVOTOUGH Laser 1800
SERVOPRO (Safe Area)	SERVOPRO 4900		SERVOPRO 5400 - SERVOPRO MultiExact 4100
SERVOFLEX (Portables)		SERVOFLEX 5100 i.s - SERVOFLEX Micro i.s	SERVOFLEX 5100 i.s - SERVOFLEX Micro i.s

BUSINESS CENTRES

EUROPE (Europe and Africa)
Tel: +31 (0)79 330 1580
Fax: +31 (0)79 342 0819
Toll Free : 00800 7378 6639

USA & CANADA
Tel: +1 281 295 5800
Fax: +1 281 295 5899
Toll Free: 1 800 862 0200

LATIN AMERICA/ MEXICO
Tel: +55 11 5188 8166
Fax: +55 11 5188 8169

ASIA PACIFIC
Tel: +86 (0)21 6489 7570
Fax: +86 (0)21 6442 6498

INDIA
Tel: +91 22 39342700
Fax: +91 22 39342701

MIDDLE EAST
Tel: +971 6 5528073
Fax: +971 6 5528074

TECHNICAL CENTRES

Servomex Group Limited
Crowborough
East Sussex, TN6 3FB
UK
Tel: +44 (0)1892 652181
Fax: +44 (0)1892 662253

Servomex Company Inc
4 Constitution Way
Woburn, MA 01801 1087
USA
Tel: +1 781 935 4600
Fax: +1 781 938 0531
Toll Free: 1 800 433 2552

SYSTEMS ENGINEERING CENTRES

Crowborough, UK	Tel: +44 (0)1892 652181
Houston, USA	Tel: +1 281 295 5800
Shanghai, China	Tel: +86 (0)21 6489 7570
Mumbai, India	Tel: +91 22 39342700

SERVOMEX
A MEASURABLE ADVANTAGE

www.servomex.com

HUMMINGBIRD
SENSING TECHNOLOGY

www.hummingbirdsensing.com

Servomex has a policy of constant product improvement and reserves the right to change specifications without notice.

PB2700D1 Rev.0 07/11 E